EXPERIMENT:2

AIM: Implement Half Adder and Full Adder using logic gate ICs.

Tools: Logisim 2.7.1 (Open Source)

Theory:

Combinational Circuit: A combinational circuit is a type of electronic circuit where the output depends only on the current inputs, not on past inputs or states.

Half Adder: Half-Adder is a combinational logic circuit that is designed by connecting one Ex-OR gate and one AND gate. The half-adder circuit has two inputs: A and B, which add two input digits and generate a carry and a sum.

Truth Table:

Inputs		Outputs	
A	B	Sum	Carry
0	0	0	0
0	1	1	0
1	0	1	0
1	1	0	1

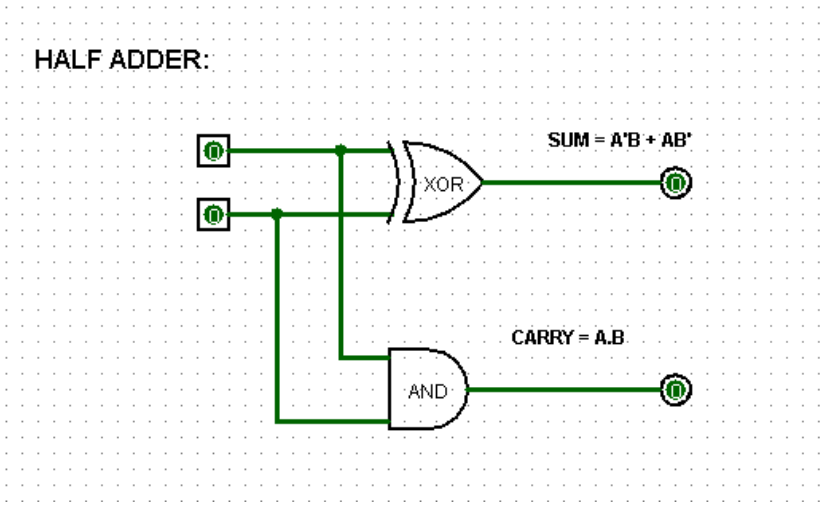

Full-Adder: Full Adder is the circuit that consists of two EX-OR gates, two AND gates, and one OR gate. Full Adder is the adder that adds three inputs and produces two outputs which consist of two EX-OR gates, two AND gates, and one OR gate.

Truth-Table:

INPUTS			OUTPUT	
A	B	C	SUM	CARRYOUT
0	0	0	0	0
0	0	1	1	0
0	1	0	1	0
0	1	1	0	1
1	0	0	1	0
1	0	1	0	1
1	1	0	0	1
1	1	1	1	1

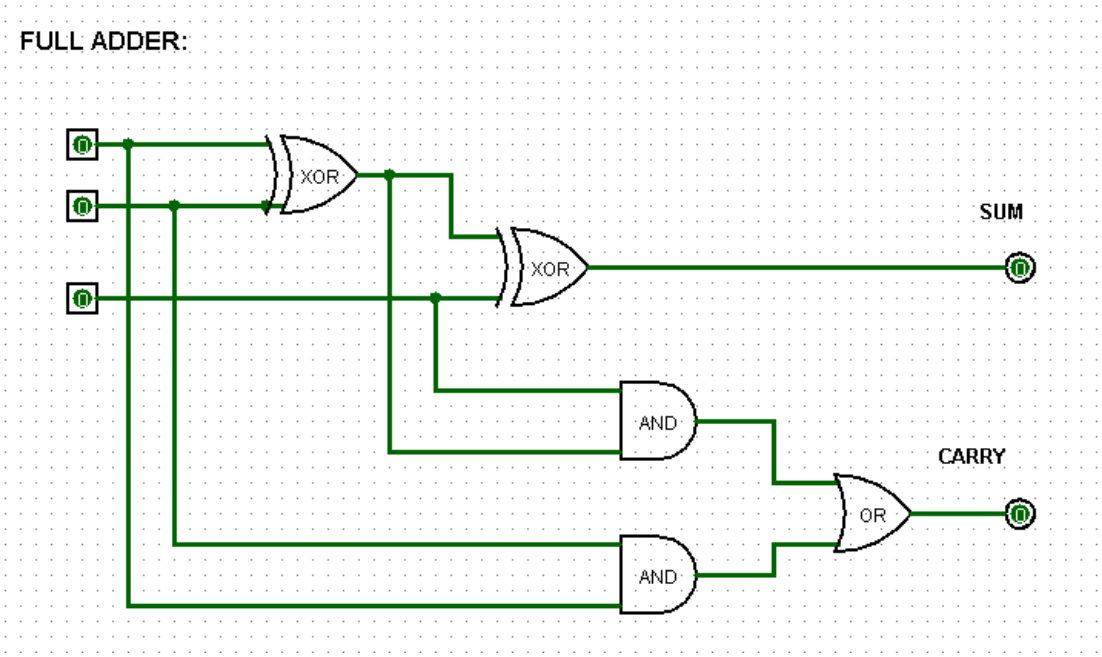

Observation:

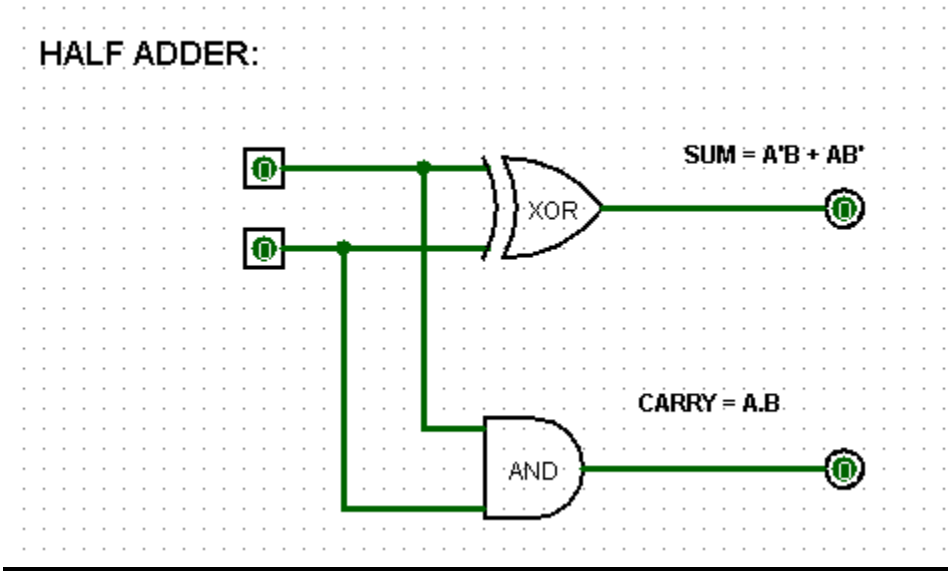

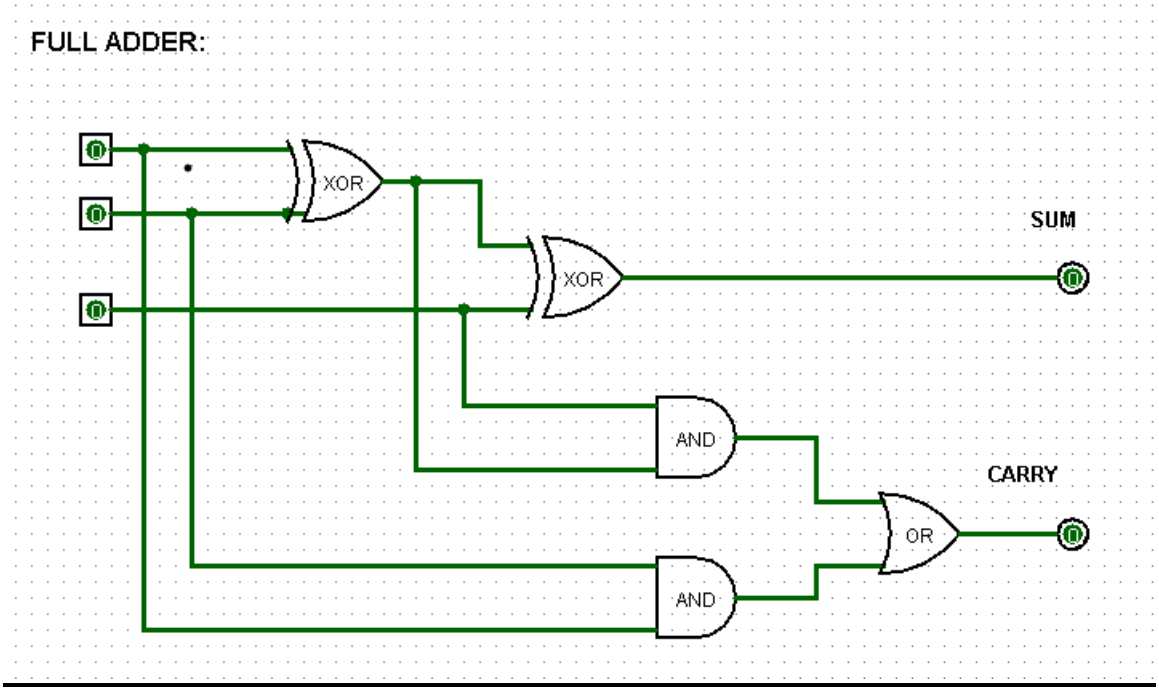

Result: Truth Table of logic gates are verified via Logisim

Half-Adder:

Inputs		Outputs	
A	B	Sum	Carry
0	0	0	0
0	1	1	0
1	0	1	0
1	1	0	1

Full-Adder:

INPUTS			OUTPUT	
A	B	C	SUM	CARRYOUT
0	0	0	0	0
0	0	1	1	0
0	1	0	1	0
0	1	1	0	1
1	0	0	1	0
1	0	1	0	1
1	1	0	0	1
1	1	1	1	1

Conclusion:

Circuit simulation and their Truth Table verification can be achieved using open source **"Logisim"** software.